Foam Sandwich Construction

Foam Sandwich for amateurs - Part one: Overview

How to build a foam sandwich composite boat

This file is an excerpt from the foam sandwich boat building instructions supplied with our plans.
The instructions supplied with the plans are more detailed and contain information specific to the boat.
For faster loading, we divided the smaller online version in several sections.

These notes will describe step by step how to build a boat in foam sandwich composite.

The notes below are not about comparing materials, we focus exclusively on building.
Appropriate foams for the methods we describe below are Divinycell, Klegecell, CoreCell and Airex (2007).
We will only use epoxy as resin: no polyester or vinylester.
Epoxies formulated for wooden boat building are not always adequate for foam sandwich.
Ideally, the builder should use a two-phase resin. This means a resin that requires a post cure at a higher temperature. Consult your designer about the correct type of epoxy.

Foam sandwich is a well proven material, light and strong. It is particularly well adapted to the building of one-off hulls. It is well suited to amateur boat building because it does not require a female mold or any special equipment.

We will describe what is commonly called the open mold method. Once you master the open mold technique, you can graduate to vacuum bagged or infused hulls.

We will focus on the techniques specific to foam sandwich. Please refer to general boat building books for details about building steps common to all methods such as strong backs set up, bulkheads alignment, outfitting, etc.
Most books about boat building describe the techniques we use in great detail. We recommend "The Gougeon Brothers on Boat Construction".

The techniques we show are common to all hull types, power or sail.

Overview of the hull building method:

We will create a foam hull shape around a wooden jig, fiberglass the outside, flip the hull, remove the jig and fiberglass the inside skin. After completion of the hull, the internal components will be added. The deck will be built the same way as the hull.

Those familiar with our plywood epoxy (stitch and glue composite) method will recognize the procedure.
The differences in building methods between plywood composite and foam sandwich result from the difference in stiffness between the two materials. Plywood is stiff and will require less molds. In plywood cored composite, the frames and bulkheads can often be used as molds. In favor of the foam is the ease of cutting and the flexibility: no need to fight the core material while bending the panels or planks.
Foam is flimsy and must be supported by a denser structure. We will use either closely spaced molds or battens on molds or a combination of the two.
A major difference is the lamination schedule. The fiberglass skins used in foam sandwich are much thicker than in plywood sandwich.

Building a foam sandwich boat step by step:

- build a jig
- plank the jig with foam panels
- fiberglass the outside
- flip the hull
- remove jig
- fiberglass inside
- install internal structure
- install systems: machinery, tanks, electrical
- build superstructure

Foam Sandwich Construction

In pictures, hull only:





1: molds 2: optional slats 3: cover with foam 4: fiberglass out 5: glass in

This file will focus on the building of the hull, deck and structural elements. For the accommodations, systems installation and paint please see our online tutorials or refer to specialized books and supplier's technical documentation.

Materials and jig types:

The specifications for the jig such as the number and spacing of molds and the use of battens depends on the type of core materials: foam sheets or foam strips.

Wide foam sheet planking:

The foam can be used in large sheets (the size of a plywood sheet). In that case, we will often use scored foam (= contoured foam). Boats with hull panels close to developable surfaces can use plain sheets of foam.

Scored or contoured foam is foam with deep cuts on one or the two sides. It conforms easily to almost any shape.

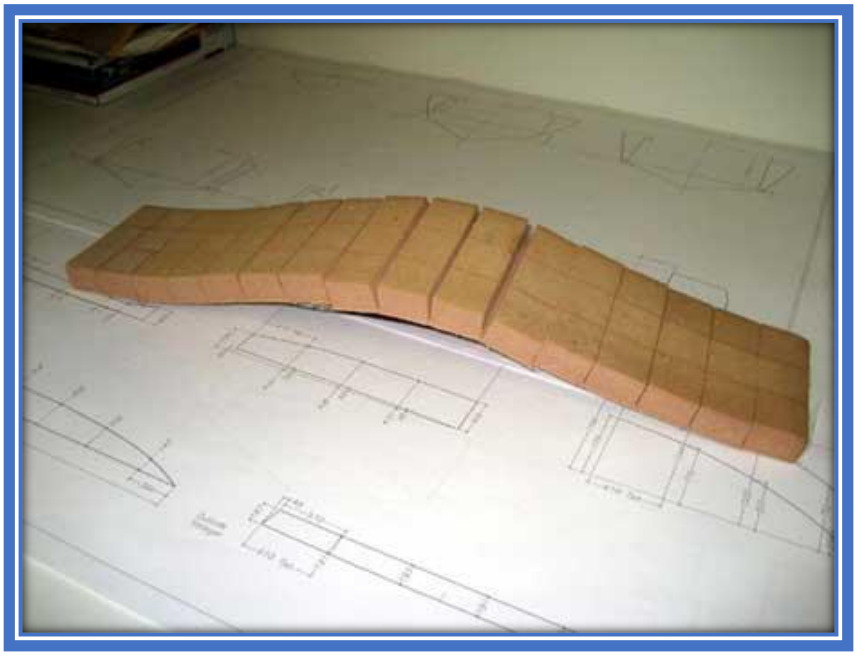

The very flimsy sheets of scored foam require more support than just the molds. We use battens (slats) over the molds to support the sheet and shape the foam accurately.

In most cases, battens spaced 6" between centers will suffice. Before installing the foam over the battened molds (sometimes called a slat mold), some builders cover the whole assembly with a sheet of plastic to prevent the resin from leaking through gaps and bonding to the jig.

The foam sheets are usually fastened to the mold by nails or screws.

Foam Sandwich Construction

Those fasteners are removed after the hull is turned over. Headless nails can be pulled through the battens from inside.

In some cases, nails with buttons are required. Buttons are small pieces of plywood acting as a washer.

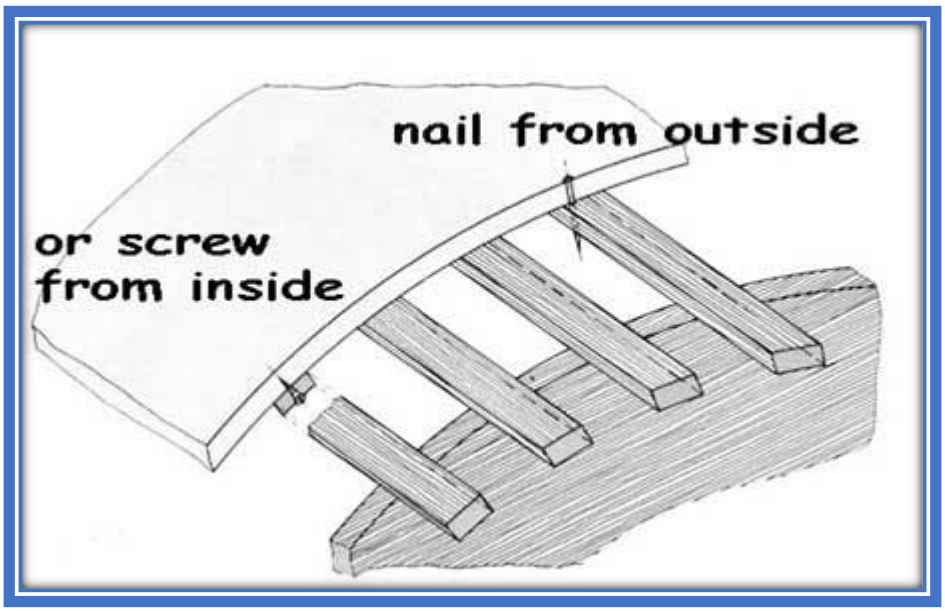

The slat mold method is the most common in professional boat building. A good slat mold can be used many times.
It is more labor intensive than strip planking methods not only because of the slats but to apply the large panels requires two men.

For amateur boat building, the foam strip planking is faster and easier.

This method of installing foam over the molds is similar to strip planking with wooden strips.

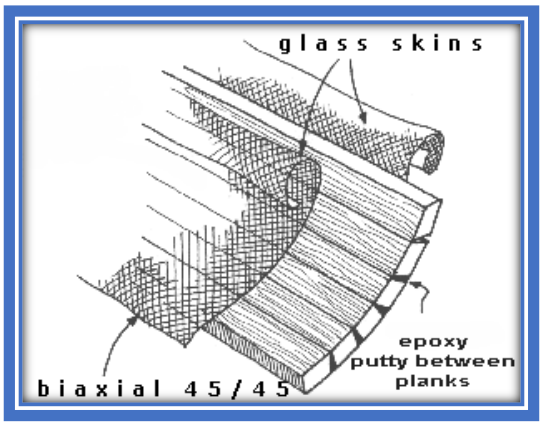

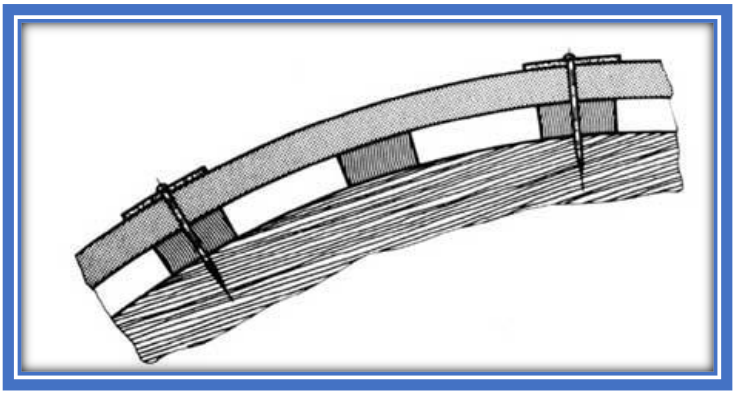

There are no battens, the foam strips or planks are installed directly over the molds.

Foam Sandwich Construction

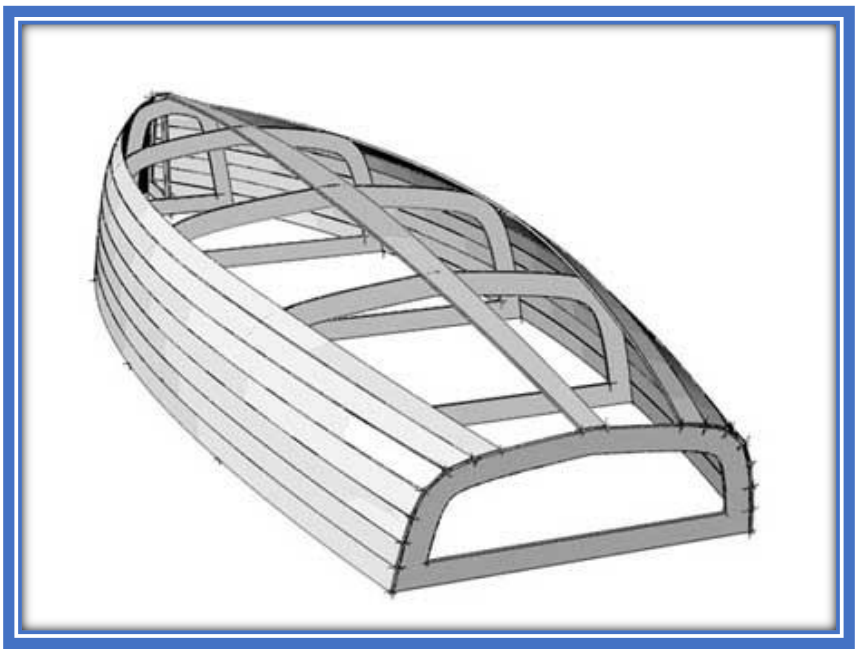

Warning: the picture above does not show all the molds or the strong backs.

We can use plain rectangular planks or bead and cove strips:

Bead and cove foam strips

Bead and cove require either preshaped strips or strips with the bead and cove cut by the builder on a router or shaper. The second option is much more labor intensive. In addition to the increase in labor, there will be a waste of expensive material.

A faster, easier and less expensive method is to use plain rectangular section strips. We will discuss later how to line them up and fasten them to the mold.

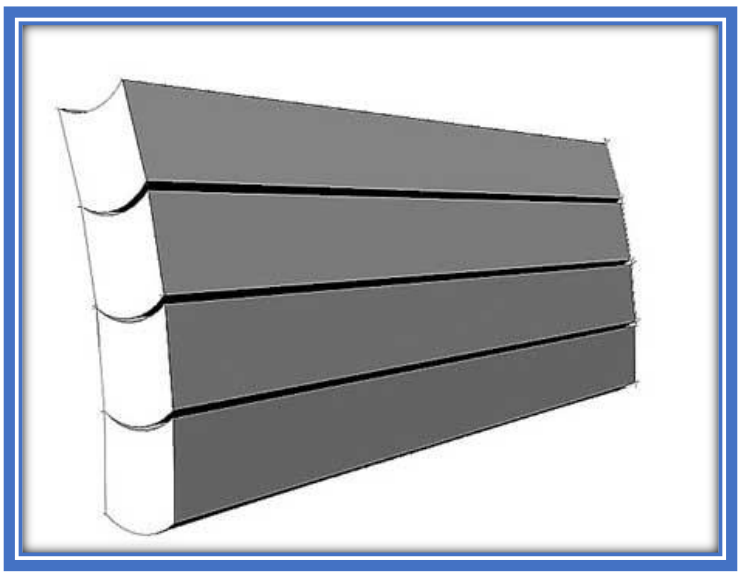

Planking with foam strips has its own requirements. Foam is not as stiff as wood and will sag between widely spaced molds. How much the foam will sag depends on the type, thickness and width of the foam strips. Keep in mind that while the planks may look fair at rest, you will be pushing on them while wetting the fiberglass fabric with resin.
Wide and thick planks will be stiffer than thin narrow ones.
Hull shapes with little curvature in section will allow the use of wider (= stiffer) strips but that may not be sufficient to take care of the sagging problem.
In addition to good fastening between the planks, there are two ways to keep the foam strips from sagging
- reduce the spacing between molds
- make the strips stiffer

Molds spaced about 18" (45 cm) are generally sufficient to support foam 1/2" thick or more in strips 6" (15 cm) wide. This works well for moderate curvature shapes.

The picture above shows a 10m (33') sail boat hull with a mold every 45 cm (18").

Foam Sandwich Construction

If the curvature requires narrower strips, a solution is to increase the stiffness of the strips.
This is done by laminating a first thin layer of glass to one side of the foam before cutting the strips. A 4 oz. woven fabric (120 gr) is ideal.
A foam sheet with such a thin layer of glass can easily be cut in strips on a table saw fitted with a blade for plastic or kitchen counter top laminates. The fiberglass side will always be on the inside of the curve, this means on the inside skin of the hull.

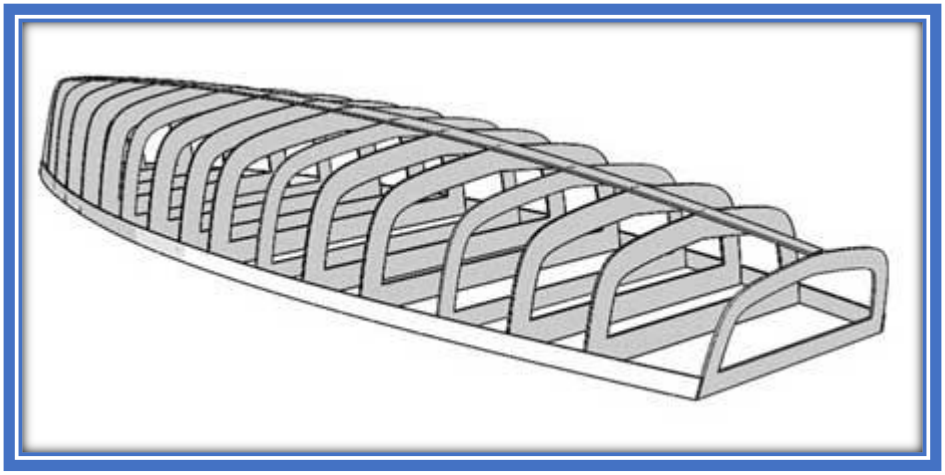

The techniques described below apply to all method: wide sheets contoured or not, planks shaped or not.
If the builder chose to plank with wide sheets on slats, less molds will be required.
We will focus on the foam plank method with plain foam, no bead and cove, no skin on the inside.
The jig is made of molds spaced maximum 18". It is then covered by Divinycell H80 strips 6" wide, 1/2" thick.

Strong backs:

The first step is to build a strongback to support the molds. All boat building books describe how to build a strongback and level it.

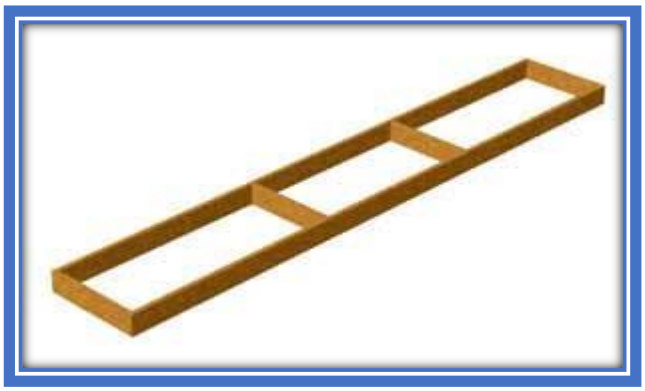

The strong back is a ladder type frame usually made from heavy wooden beams, but some builders use steel framing as in the picture below.

On the strong backs we will mount our molds.

The strong backs must be level. This is extremely important but easy to achieve. A hose water level is the best tool to level a strongback. It is a simple clear plastic tube filled with colored water (food coloring works well):

To use such a water level is simple: attach one end to a wall with the water approximately at the level of one corner of the strongback. Put the other end against the corner of the strongback and measure the difference. Let's say that your strongback is 2" below the colored water level. All other corners must be adjusted to be at the same 2" below. This is much more accurate than any mason level or laser system.

Foam Sandwich Construction

The strong backs must not only be level but square. Compare the diagonals, if they are equal, the strongback frame is square.

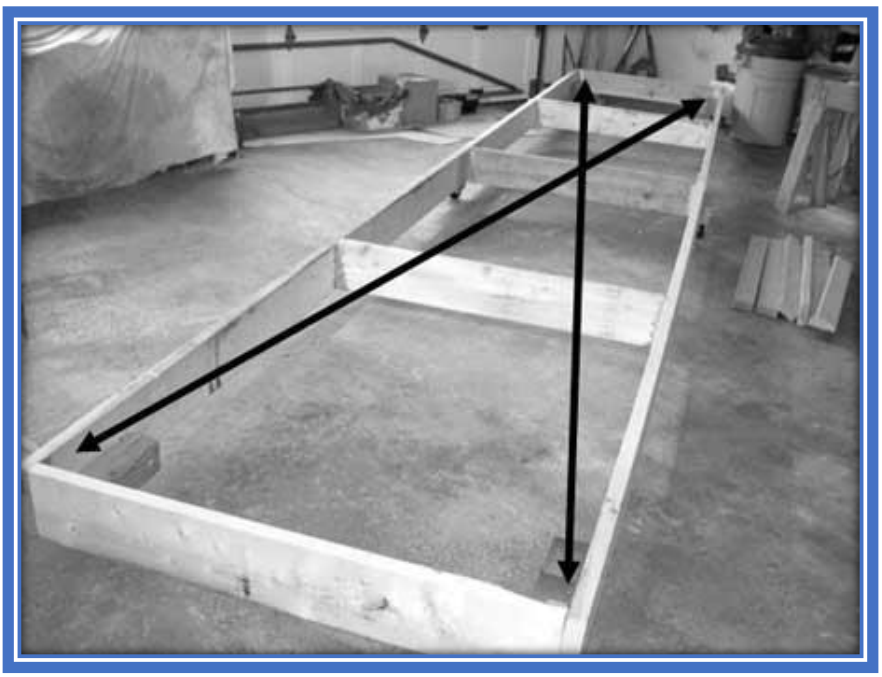

Molds:

Molds can be made from particle boards, framing lumber or cheap plywood.

In some cases, CNC cut molds are available. For all our foam sandwich boats, a DXF file showing the stations full size is available.
A DXF file is a Drawing exchange Format file, a CAD file compatible with all systems. All blue print shops and plotting services can read DXF files.
Our DXF files can be used by a plotting service to print full size patterns. Mylar should be used for patterns because paper is not dimensionally stable.

You can also cut your own molds from the dimensions given on the plans. All our plans for foam sandwich show all the molds spaced 18" or less and the dimensions for each mold. This is rare. Most boat plans show the traditional 10 stations. Ten stations are not enough to build a jig with closely spaced molds. Additional molds located between the ten stations are necessary. If the dimensions for these molds are not on the plans you may have to loft the complete lines plan full size and extract molds dimensions from the lofting. This is not required with our plans.

Fabricating the molds:

If you do not use full size patterns extracted from our DXF files, you must draw the molds on a table or floor made from plywood sheets.

Definitions:

Before we proceed, let's in introduce some notions that we will use: stations, waterlines and buttocks. Those are sections through the hull used to represent the 3-dimensional shape in 2 dimensions.

The waterlines (WL) are just what the name says: lines produced by sections parallel to the water line:

The stations are transversal cuts:

Foam Sandwich Construction

The buttocks are longitudinal sections perpendicular to the waterline (vertical):

We will use the stations lines to draw the molds.

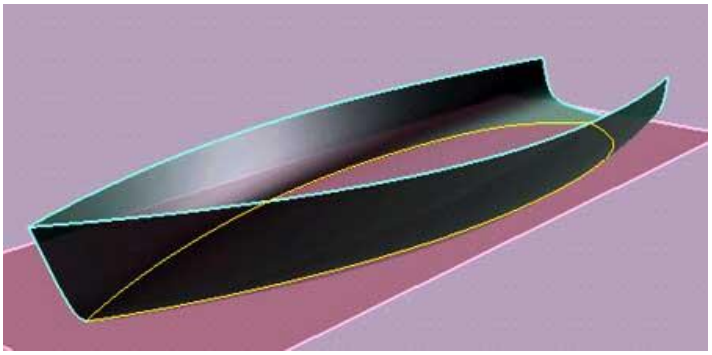

Boat building books describe different methods to transfer the station lines to the mold's material. All these books require the builder to draw the outline of the molds full size on the shop floor or on a large plywood platform and transfer that outline to the mold's material.

Note that this is not lofting. Lofting is a much more elaborate task during which the lofter draws the all the boat lines, WL's, buttocks and stations full size and corrects drafting errors due to scaling problems.
Boats designed in 3D CAD do not require lofting. The dimensions extracted from the 3D models are much more accurate than what can be achieved through lofting.

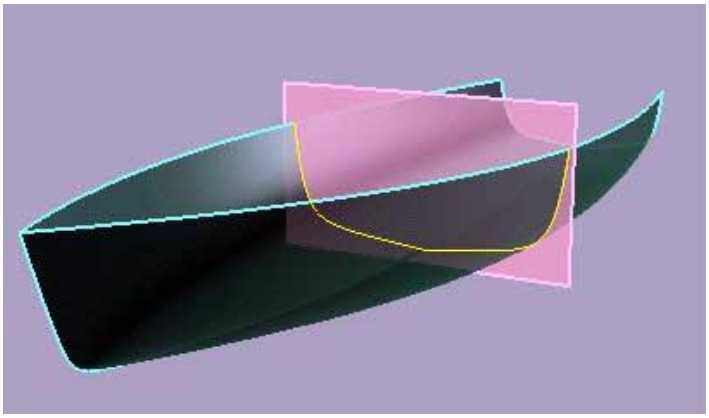

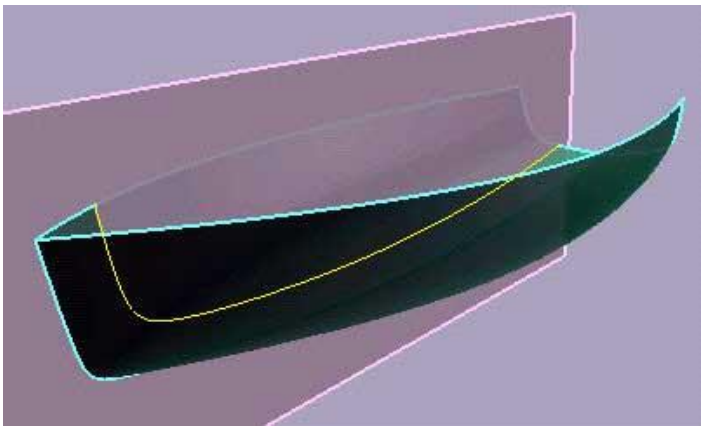

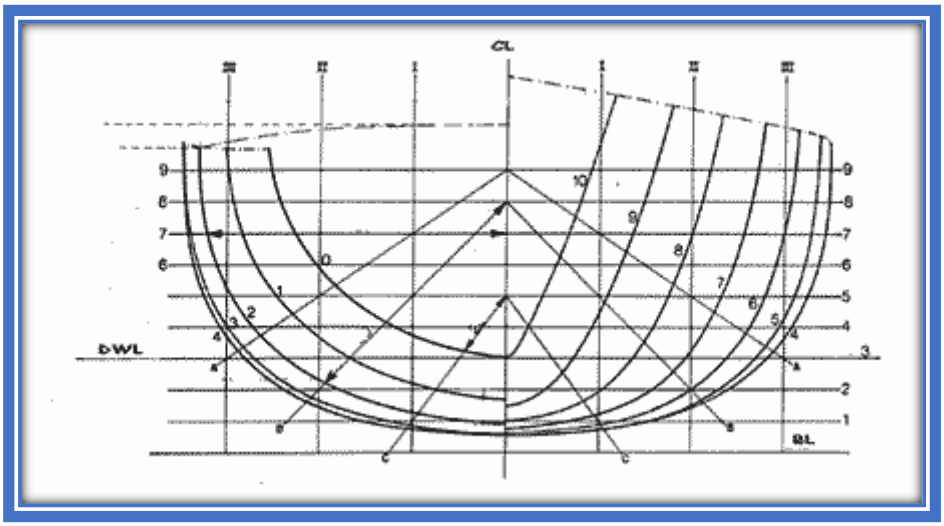

The picture above shows a traditional station drawing.

Foam Sandwich Construction

There may be more stations and the diagonals are not always shown.
The designer can show the station dimensions in different ways. The traditional method uses a table of offsets instead of dimensions.

How to read the offsets:

Reminder: no drawing is necessary if you use Mylar templates or have your molds cut by a CNC shop from our DXF files. In that case, skip this paragraph and go to the molds set up.

A table of offsets is simple to use. All the points used to draw the curves are located either on a waterline or on a buttock. The table gives either a width or a height for each point.

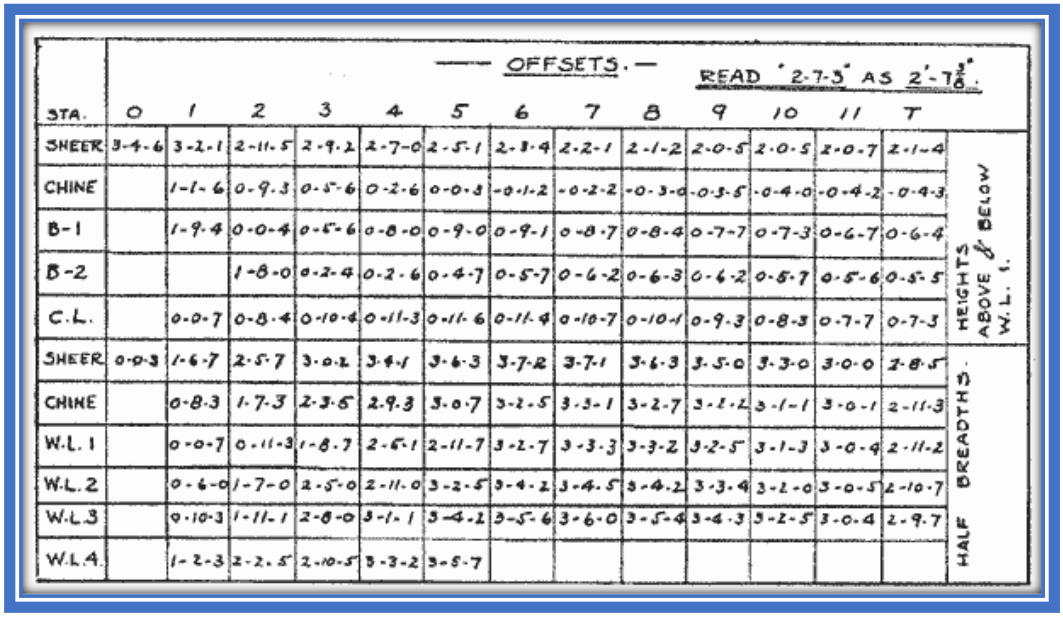

— OFFSETS. — READ '2-7-5" AS 2'-7⅝".

STA.	0	1	2	3	4	5	6	7	8	9	10	11	T	
SHEER	3-4-6	3-2-1	2-11-5	2-9-2	2-7-0	2-5-1	2-3-4	2-2-1	2-1-2	2-0-5	2-0-5	2-0-7	2-1-4	HEIGHTS ABOVE & BELOW W.L. 1.
CHINE		1-1-6	0-9-3	0-5-6	0-2-6	0-0-3	-0-1-2	-0-2-2	-0-3-0	-0-3-5	-0-4-0	-0-4-2	-0-4-3	
B-1		1-9-4	0-0-4	0-5-6	0-8-0	0-9-0	0-9-1	0-8-7	0-8-4	0-7-7	0-7-3	0-6-7	0-6-4	
B-2			1-8-0	0-2-4	0-2-6	0-4-7	0-5-7	0-6-2	0-6-3	0-6-2	0-5-7	0-5-6	0-5-5	
C.L.		0-0-7	0-8-4	0-10-4	0-11-3	0-11-6	0-11-4	0-10-7	0-10-1	0-9-3	0-8-3	0-7-7	0-7-3	
SHEER	0-0-3	1-6-7	2-5-7	3-0-2	3-4-1	3-6-3	3-7-2	3-7-1	3-6-3	3-5-0	3-3-0	3-0-0	2-8-5	HALF BREADTHS.
CHINE		0-8-3	1-7-3	2-3-5	2-9-3	3-0-7	3-2-5	3-3-1	3-2-7	3-2-2	3-1-1	3-0-1	2-11-3	
W.L. 1		0-0-7	0-11-3	1-8-7	2-6-1	2-11-7	3-2-7	3-3-3	3-3-2	3-2-5	3-1-3	3-0-4	2-11-2	
W.L. 2		0-6-0	1-7-0	2-5-0	2-11-0	3-2-5	3-4-2	3-4-5	3-4-2	3-3-4	3-2-0	3-0-5	2-10-7	
W.L. 3		0-10-3	1-11-1	2-8-0	3-1-1	3-4-2	3-5-6	3-6-0	3-5-4	3-4-3	3-2-5	3-0-4	2-9-7	
W.L. 4		1-2-3	2-2-5	2-10-5	3-3-2	3-5-7								

The picture above shows a traditional table of offsets. Each column shows points on a station. For example, column 5, row WL1 is 2-11-7. This means that on station 5, the intersection of waterline 2 is at 2' 11-7/8 from the centerline.

We use another type of offsets drawing. We supply one drawing per station and show each point on that drawing.

The drawing above does not show a real hull station.

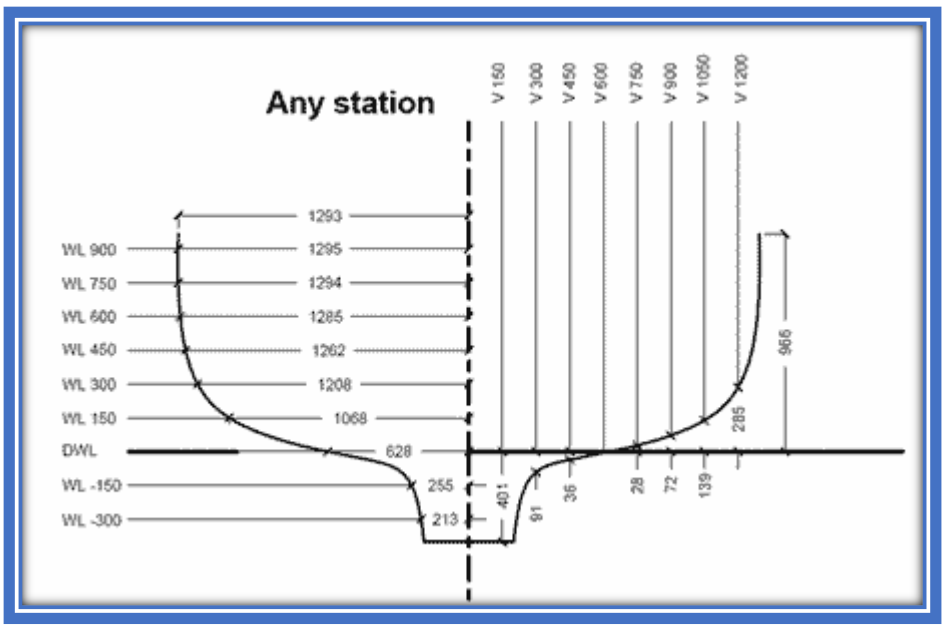

If the boat has 20 stations, we provide 20 drawings as above.
In this case, the Designed Water Line is the also the baseline. The drawing is in millimeters (metric) but units do not matter here.
We like to name the grid lines by their distance to the baseline or center line.
WL750 is a waterline 750 units above the baseline (DWL) and V150 is a buttock or Vertical 150 units away from the centerline.
Our offset system is much easier to read and reduces the risk of errors.

Often, less points are required. In the case of hard chine hulls, the offsets can be very simple. Here is an example of a station drawing taken from our LB26.

Foam Sandwich Construction

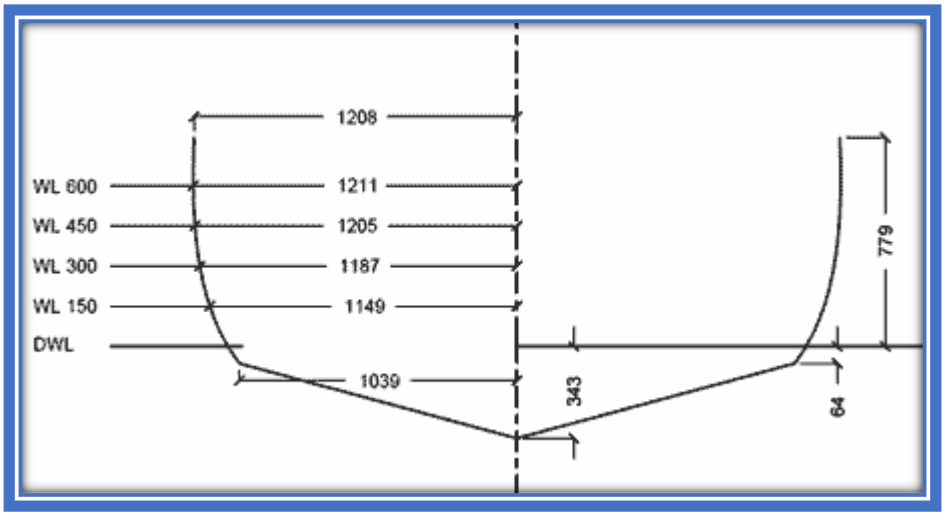

In this case, at that station, the bottom section is straight and requires only two points, but the side is cambered, and we show more points.

Stations outline:

To draw the molds from a table of offsets or from our stations drawing, the first step is to draw the grid on which we will mark the points.

Start by setting up a "drawing board. This is usually sheeting of plywood, often painted white.

Our grid will correspond to the WL (waterlines, horizontal lines) and Buttocks (Vertical lines) show on the plans On that grid, we will mark all the points that define one station and join them with a fair curve.

Note that you will probably use this drawing to cut not only molds but bulkheads and frames. It is much easier to draw the lines once and take all outlines from the drawing instead of taking the dimensions of bulkheads and frames dimensions from the inside of the hull after it is built.
Taking dimensions from the drawings is also more accurate. While it may take you a day to draw all the curves, later you will save you several days of work when building the inside.
If the designer takes it in consideration (as we do), the stations will be located as much as possible at the main bulkheads and frames.

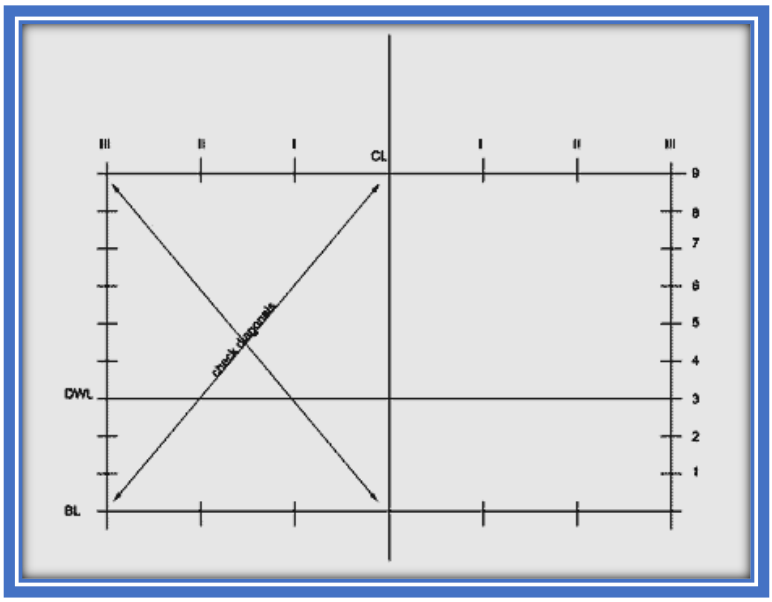

Reading the dimensions:

While the drawing shows two sides for clarity, we will only draw one side and use it to draw the other side.

Start by identifying the "corners of your station: keel (we call it fair body), chine and sheer.
The keel point is on the centerline at 343 below the baseline.
The chine is 64 below the baseline and 1039 away from the centerline.
The sheer is 779 above the baseline and offset 1208 from the centerline.
We can draw the bottom by joining keel and chine.
For the cambered side (this boat has tumblehome), we need more points.
On waterline 600, we mark a point at 1211, on WL 450, another point at 1205. We proceed the same way for all the waterline points.
Then will draw a fair curve through all those points, from the sheer to the chine.

Foam Sandwich Construction

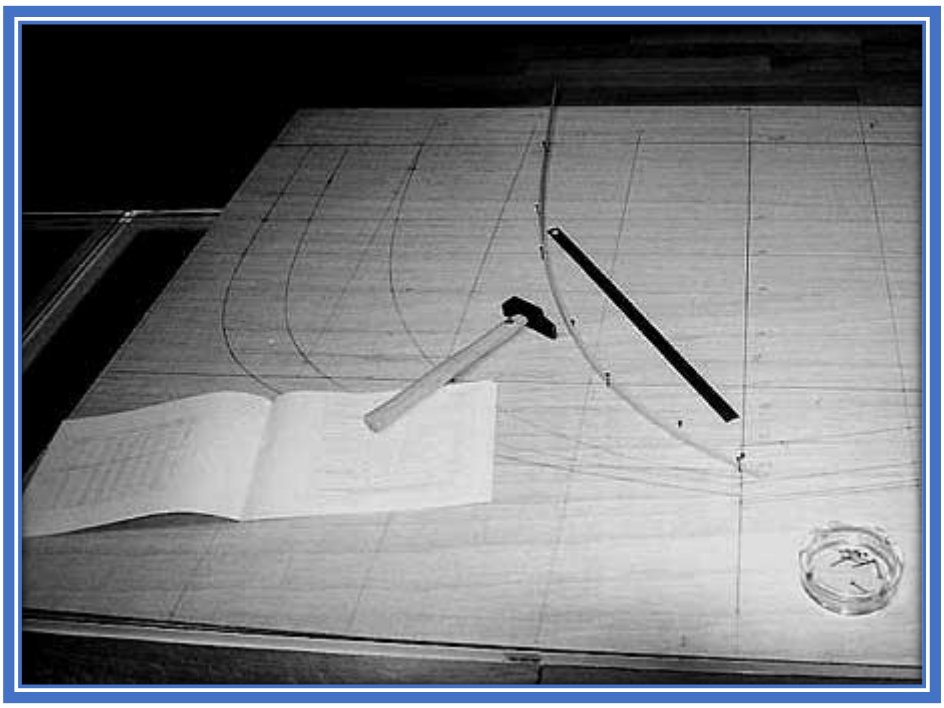

To join those points, use a batten and weights or nails. We show pictures of the method with weights in our other tutorials but here is one using nails and a thin batten for a small boat station.
The batten can be wood or plastic. Some have used a PVC pipe with success.

Once we have the station, we can draw the mold outline. Most of the time, the station shows the outside of the hull, but the molds must fit inside the hull material. The mold is smaller than the station.

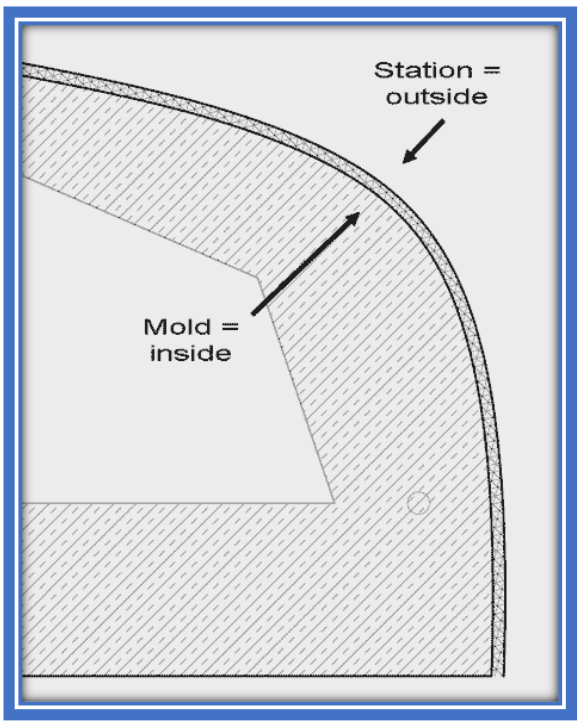

Almost all designers draw the stations as sections through the outside surface of the hull.
There are good reasons for that: the designer doesn't know what exact size of mold battens will be used if any and there may be material thickness options.
In the case of foam sandwich, the molds will be on the inside face of the foam and we must offset the outline of the mold by the thickness of the foam plus the average thickness of the outside skin.
As an example, for our LB26, from outside: fiberglass skin average 8 mm, foam 15 mm, total offset 23 mm.

There are many ways to offset that line, we like to use a reducing wheel: a simple round piece of plywood with a hole for a pencil in the middle, the radius is equal to the offset.
Run the reducing wheel along the batten we used previously, and it automatically draws the correct mold outline.

Foam Sandwich Construction

Now that we have the mold outline, we must transfer it to the mold material.

Transfer outline to molds material:

The Gougeon book shows 4 methods of transferring the stations outlines to the molds. We like the tracing paper method. Copy the line to tracing paper (translucent bond) and transfer from the paper to the mold with a pounce wheel.
You can either make one copy per mold or better, make a copy of several molds on a large piece of pattern paper and transfer from there to the molds with the pounce wheel.

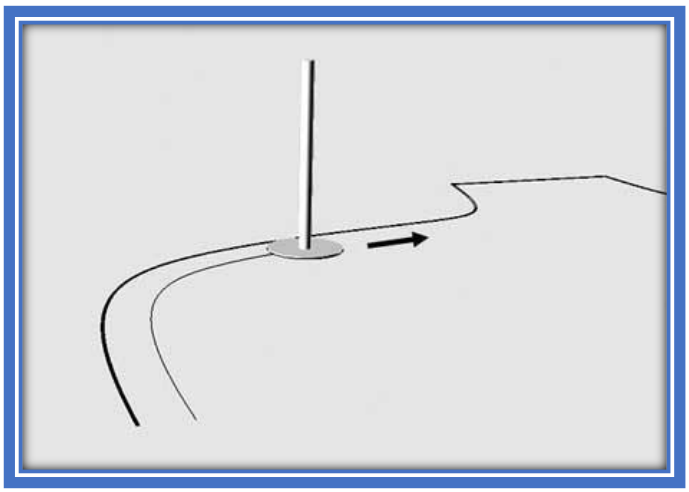

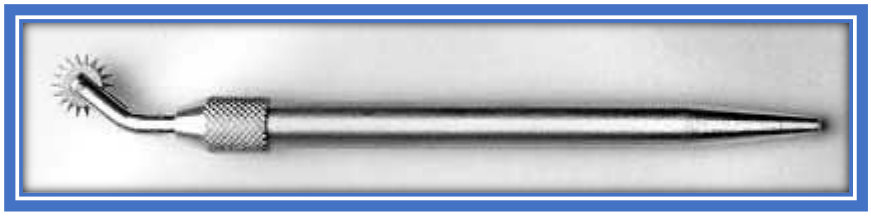

Another valid method is the nails system:

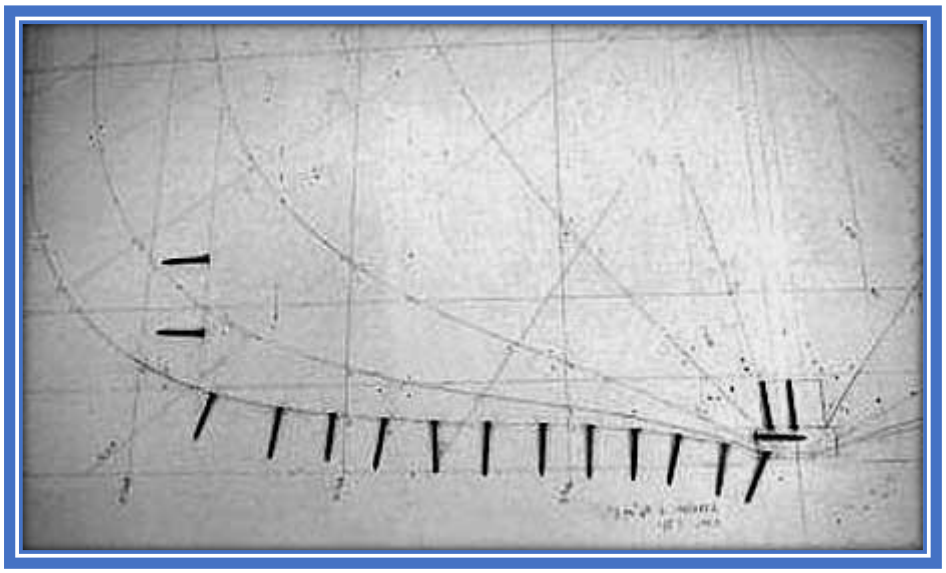

This works well with particle board molds. Line up a row of nails with their heads along the outline of the mold then press the mold on the nails. The nails will mark the material and you can draw a line through those points.

Finally, instead of drawing on a separate table and then transferring to the molds, it is valid to draw each mold directly on the mold material. The drawing lines are visible on the molds in the picture below:

Whatever method you used to draw and cut your molds, each mold should have crucial lines clearly marked: centerline and baseline, sheer line and DWL if shown on the plans.
If you plan to use a laser beam to check alignment, mark the location for the holes now. The alignment method is described later in the set-up section.

Molds can be made from solid sheets of particle boards, plywood or framing wood. For large boats, it is often necessary to have access to the inside of the jig, this may require cutting large holes in molds made from full sheets of particle board

Foam Sandwich Construction

There is more than one good method to install the molds on the strong backs but think of how you will align the molds during the set up.
You will have to move your molds in 3 directions: back and forth, sideways and up and down.
The fore and aft alignment is easy: mark the location of the molds on the strong backs and check with a plumb line. We like to put some of the strongback cross beams at a mold location. The centerline alignment can be checked with a plumb line dropped from a steel cable running above the jig or better, with an inexpensive laser pointer. The same laser method can be used to level all molds to the baseline.

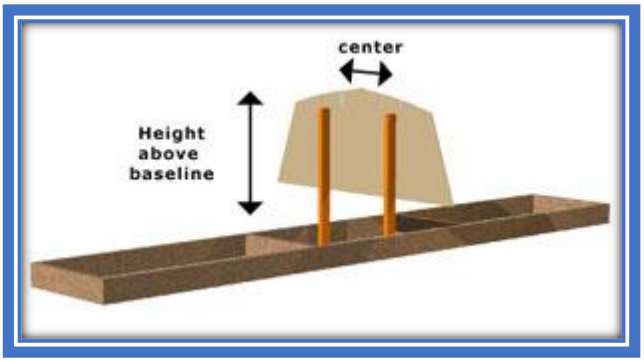

Drill small holes to check alignment; a laser beam must run through all the holes if the molds are correctly set up.

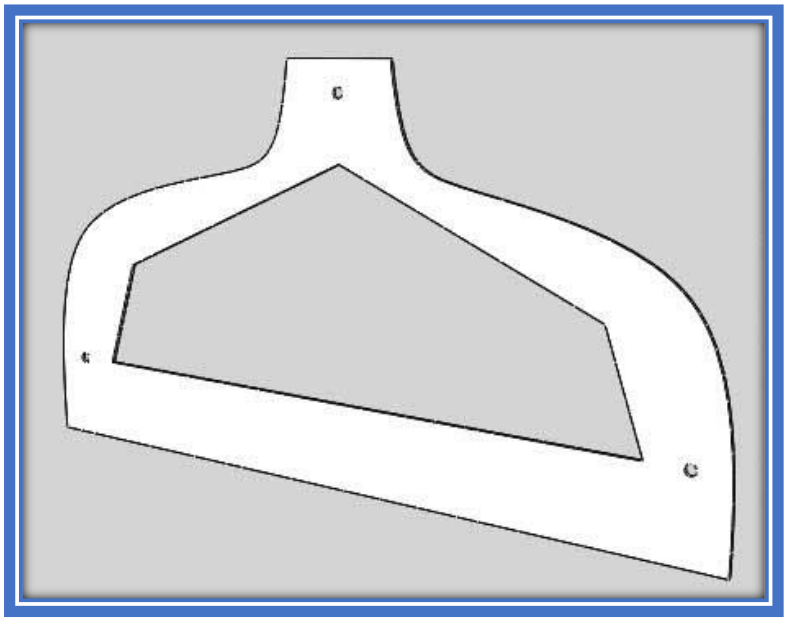

One hole on the centerline at the same height for all molds is a good start but two additional ones on the same waterline and at the same distance from the centerline are perfect. If your laser beam passes through the 3 holes, your jig is perfectly lined up.
We have found that a 3/8" diameter (10 mm) hole is fine for a precise alignment.

Molds should be braced after alignment.

Planking:

We will describe the planking with wide foam strips but before we start, let's look at our plans to check if the designer specified foam core everywhere.
Depending on the design, there are parts of a foam sandwich boat that are made of single skin glass and others where we will need high density inserts.
The standard foam sandwich does not have the compressive strength to take concentrated loads such as under a winch or cleat, at a mast step or for keel bolts. The designer also considers loads on the sandwich when the boat runs aground, is stored on the hard or lifted. A keel or chine may be considered as a girder. For those reasons, some parts of the boat are made of a single skin or have a high density insert. Some examples:

A single skin keel as in one of our power boats. This is used in moderate and deep vee hulls only, not in shallow vee hulls.

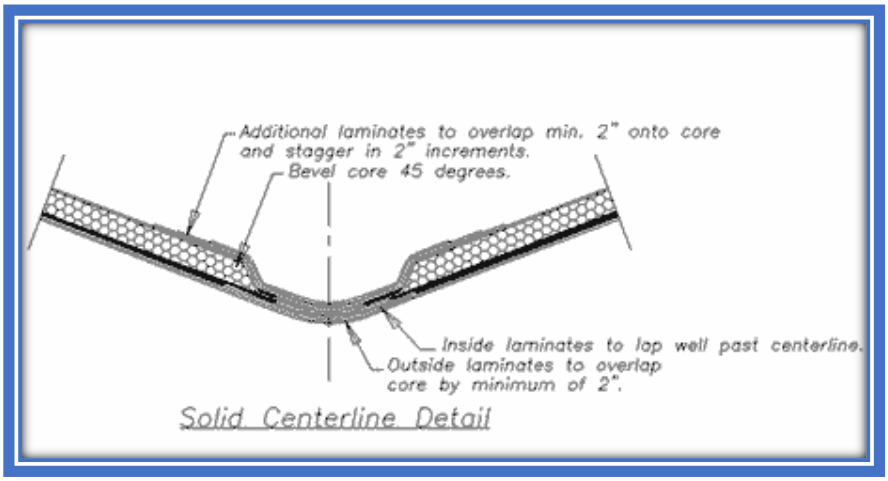

Foam Sandwich Construction

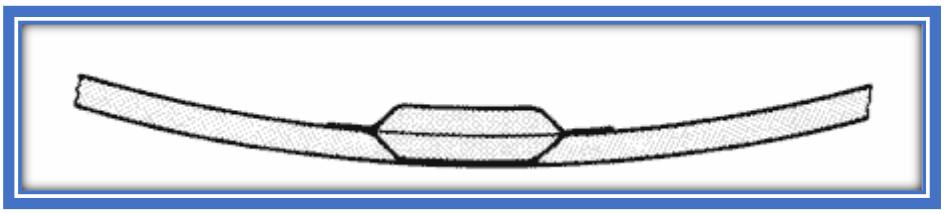

Another way to stiffen the keel: a double sandwich made from high density foam (club sandwich).

A high-density foam inwale on a single skin transition will receive a screwed through rubrail and toe rail.

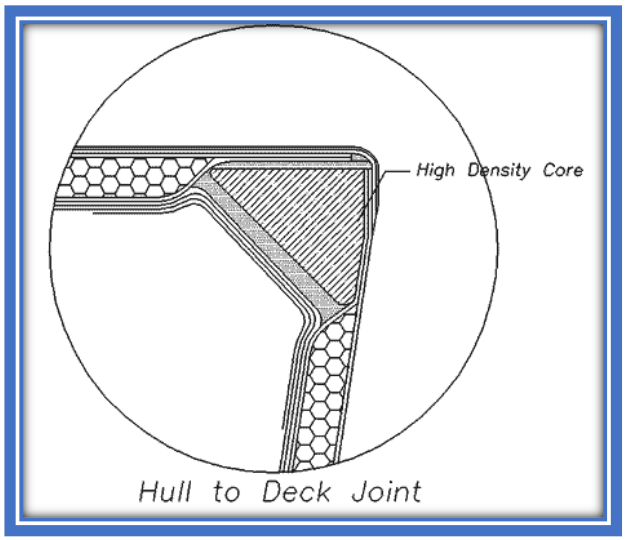

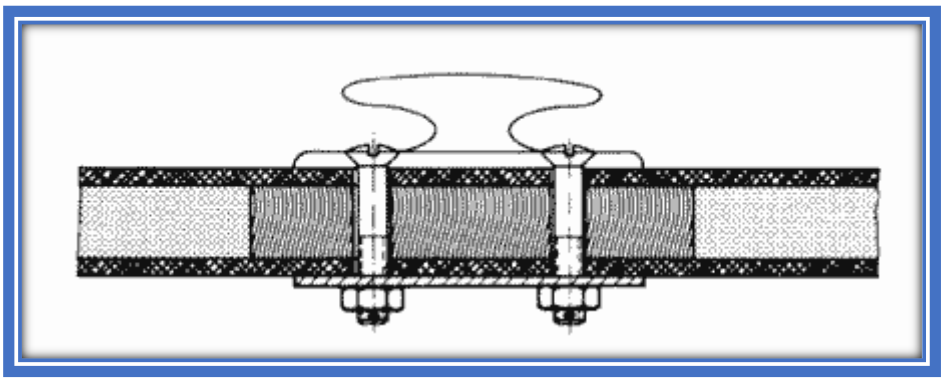

A through bolted cleat: the dark area is high density foam.

There is more, we will examine inserts later when discussing details.

A common high-density insert is the first plank at the sheer and or at the keel. This is simple: start your planking with the high-density foam:

In some cases, like the keel mentioned above, there is a transition from sandwich to single skin.

Below is a sailboat keel or stub keel: the hull is foam sandwich, the keel is single skin.

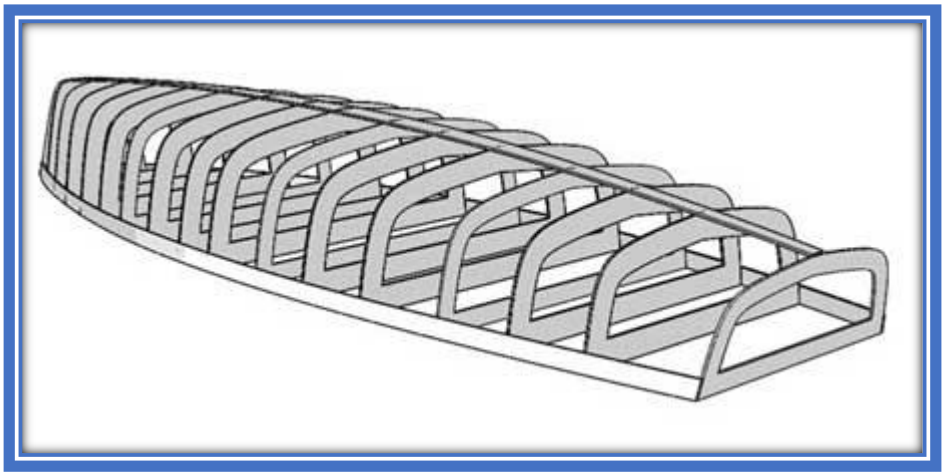

Foam Sandwich Construction

To make the transition from sandwich to single skin, after turning the hull over, the foam will be removed with a grinder in the single skin area. The foam is tapered from full thickness to zero then covered by the inside skin and maybe some additional layers up to the thickness specified on your plans.

Since we will remove the foam, there is no need to use expensive sandwich foam in the keel area. Instead, we will plank that part with cheap insulation foam of approximately the same thickness.

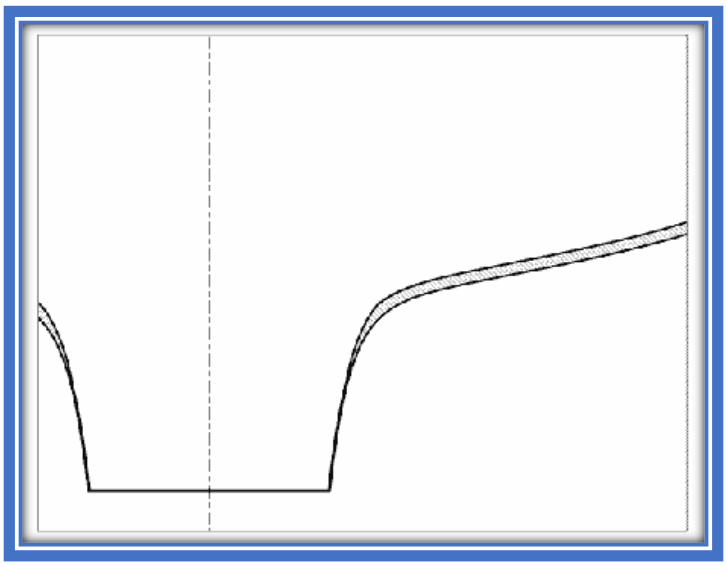

In the picture above, the dark area shows our sandwich foam, the lighter area is cheap insulation foam that will be removed.

Now that we have decided where to use high density foam and cheap sacrificial foam, let's proceed with the planking

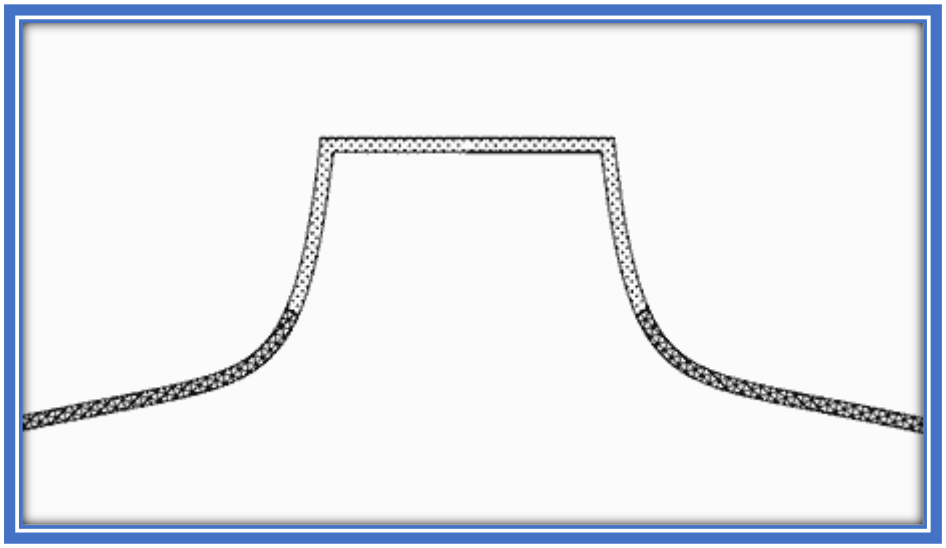

Planking the jig and outside fiberglass:

This file is an excerpt from the foam sandwich boat building instructions supplied with our plans.
The instructions supplied with the plans are more detailed and contain information specific to the boat.
For faster loading, we divided the smaller online version in several sections.

Planks width:

The width of the foam planks depends on the curvature of the hull. In flat areas, very wide planks can be used, in others, the planks must be narrow to produce a smooth curve. Your designer may specify the width of the planks.

Plank fastening to molds:

The strips will be fastened to the molds from outside with nails or screws on buttons and we will use copulas between them, along their edges.
Copulas are small plastic barbed nails made by Raptor.
The nails are removed before fiber glassing, but the plastic copulas stay in the core.
If the molds are too thin to take a fastener, small cleats installed flush with the molds should be used.

Plank to plank fastening:

Some builders glue the foam strips together with spots of hot glue, others tie them to the molds with straps (masking tape) and "spot weld" with resin in between. We prefer to use copulas. The copulas stay in the core.

Foam Sandwich Construction

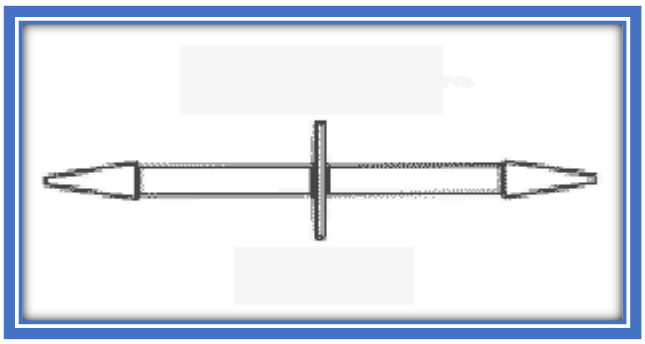

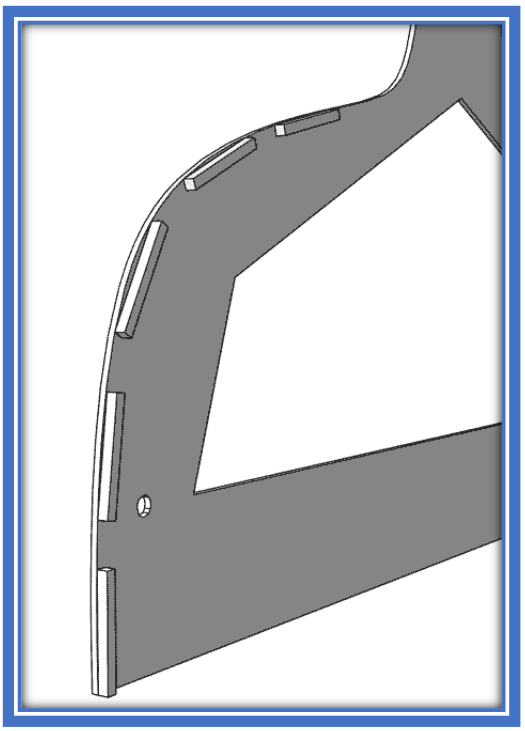

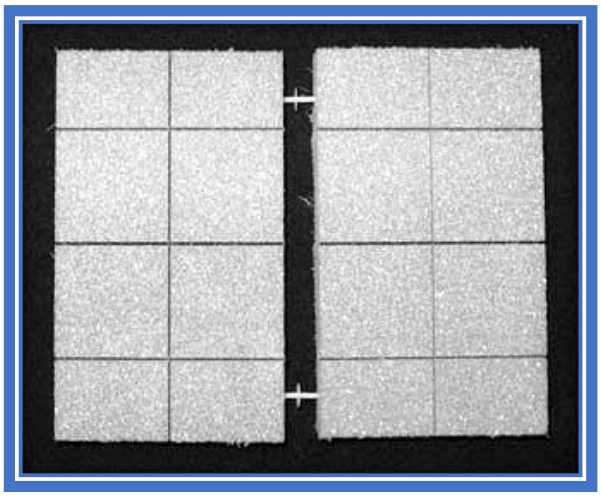

If copulas are not available, the builder can use toothpicks. In addition to the copulas, the planks can be spot welded with small amounts of fast cure epoxy glue.

Planking sequence:

This will depend on the hull shape but the most common method consists of planking from the sheer up to where the chine curvature starts

and then start at the keel, proceeding towards the chine.

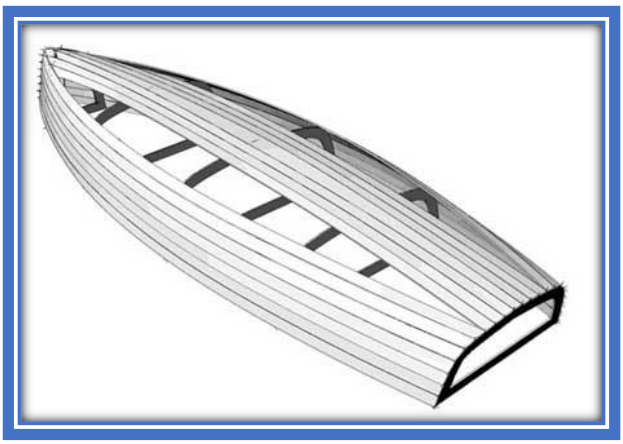

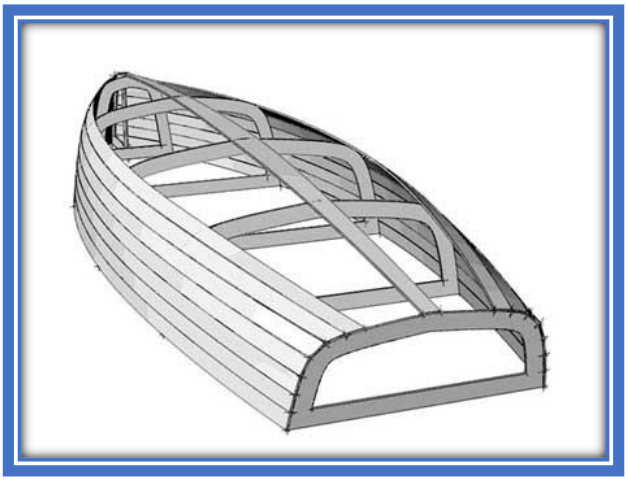

The planks between those two areas must be cut to fit as you progress.

This is the most common way to lay out the planks, but other methods are valid; it doesn't really matter.

In most cases, the transom will be left open to provide access to the inside of the jig, but it is not an absolute requirement. In outboard powered boats, the transom is almost always installed on the jig at this stage.

Foam Sandwich Construction

The gaps between the planks are filled with a resin slurry then faired. As we stated on the first page, we exclusively use epoxy resin, no other putty or glue.

At this point, the building progress is almost identical to the building of a plywood cored boat. We will apply the outside skin, let it cure, flip it over and build the inside skin.

Books or articles about foam sandwich will recommend applying a coat of bonding putty to the foam before the first layer of glass. This is important with polyester to avoid core separation, but it is not necessary with epoxy.

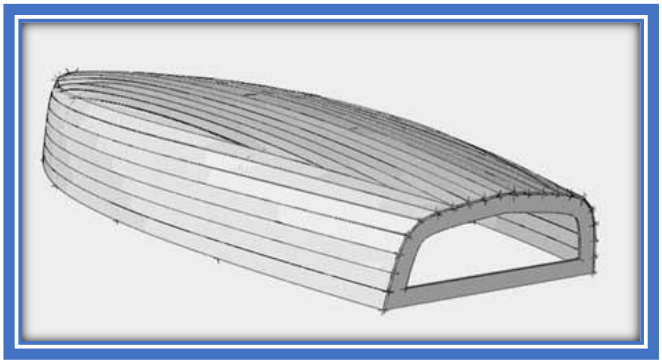

Compared to plywood cored composite, the fiberglass skins will be much thicker. We usually start with a priming coat or tack coat of resin over which we apply the layers of glass specified by the designer.
We prefer to work wet on wet. This is applying one-layer glass and epoxy over the other while the first one is still wet or green. Green means not yet hardened or cured.
Wet on wet has many advantages. This method will produce a laminate with a higher glass content (this means stronger) and we avoid potential amine problems and sanding between coats.
There are two problems that could keep us from working wet on wet: exotherm and flexing of the planking.
Exotherm problems result from heat produced by the epoxy cure. Fortunately, epoxy has a much lower exotherm than polyester and only very thick laminates require you to do the layup in several steps. For those hulls, the lamination will require several days anyway.
Flexing of the core while applying the fiberglass may happen on any boat built with the foam planking method.
If, at the start, the planking flexes between molds, start by applying a skin coat: the first layer of the lamination schedule and let it cure before proceeding wet on wet with the next layers. This will add enough stiffness to the hull to properly squeeze the excess resin out of the following layers.
If the first layer is heavy material, use a thin veil like a 4 oz. woven cloth as skin coat.

We prefer to use full lengths of glass and work wet on wet. On large hulls, it may not be physically possible to apply the fiberglass lengthwise. In that case, the glass can be laid up across the hull but pay attention to the fiber orientation.
If wet on wet is not possible, depending on the resin type and temperature, you may have to scrub the resin amine blush between layers of epoxy.
How and when to scrub amine between cured layers is described in our epoxy How To files.

Often, we use a finishing veil to reduce the need for fairing. This is a last layer of glass, a very thin one, installed after a rough fairing of the previous layers.

If you use a resin that requires post cure, this is the time to proceed with that phase. With the Silver Tip or Phase 2 from System Three, we only need 140 F (60 C) for two hours. That is easily obtained under a plastic tarp with an electric heater. (Use an oil electric heater, no exposed element or flame please!).

All the hull fairing should be done while the hull is upside down. See our tutorials about fairing, sanding and priming.

Roll the hull over whichever way you want. Since you will need a cradle to support the hull while upright, it makes sense to build it now and use it to roll the hull over. This is not difficult thanks to the light weight of the hull at this stage.

The shape of the roll over cradle and how it is fastened to the jig will depend on the boat but two external frames parallel to the molds with bracing are enough.
One or two persons can turn over a large hull this way:

Foam Sandwich Construction

- lift one side with jacks until the hull is balanced on a corner of the cradle.
- use a hoist (come along) to control the roll until the hull is at 90 degrees to the floor
- repeat for another 90 degrees until the hull is resting keel down, open side up.

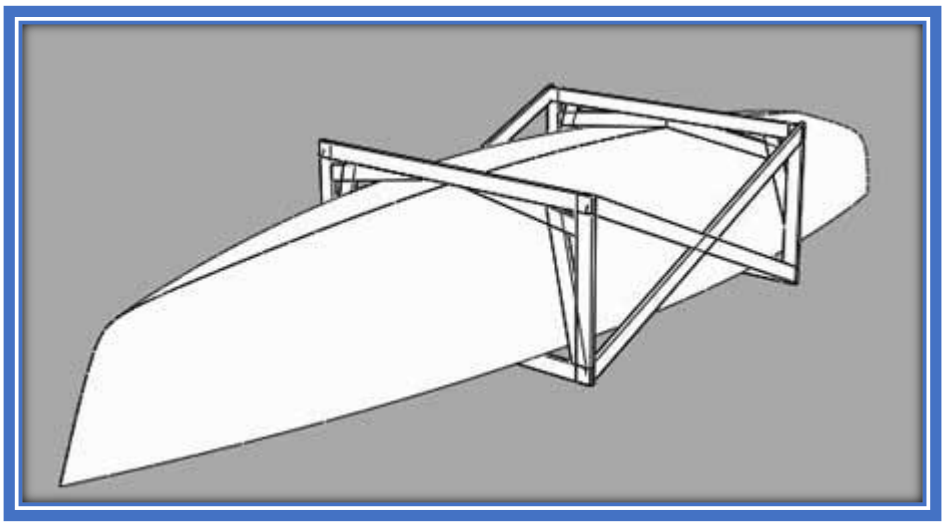

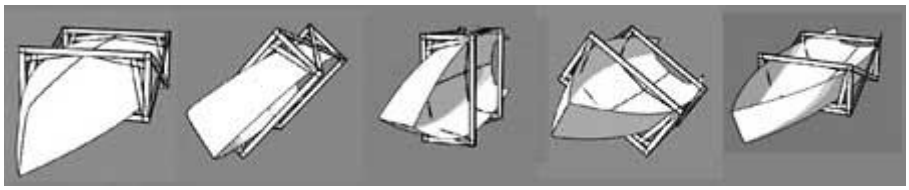

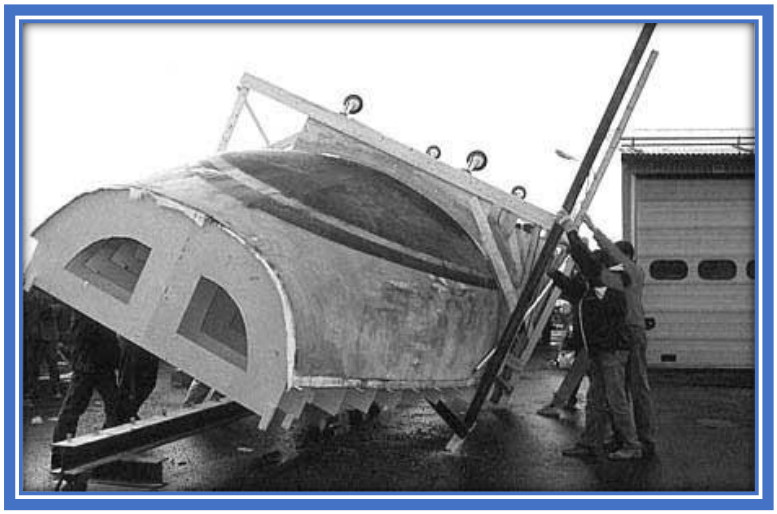

Some builders use a cradle with rounded corners to facilitate the roll.

With the hull right side up, add more support frames as necessary and check diagonals and level.
Once the outside is well supported, before removing the molds, transfer some important measurements to the core: baseline (or a waterline) and some main station locations. Those marks will be visible through the resin. If necessary, we will repeat them every 2 or 3 layers. This will help us align frames, bulkheads, sole etc.

Prepare for inside skin:

Remove the interior framing.
Remove cheap foam from single skin areas, taper core foam at single skin transition. Experience and lab tests show that the ideal taper ratio of length to thickness is 3 to 1. Fill gaps between core foam planks if any with epoxy putty.

Single skin areas:

Hardware installed on the hull like chain plates, rudder fittings or rudder ports, may require high density foam inserts or a transition to single skin fiberglass. We describe how to install those components in the paragraph about hardware, but you must plan for it at this stage.

Foam Sandwich Construction

Where needed, replace the hull foam with high density foam or grind down the core foam to make a transition to single if necessary.

Single skin areas are made of the combined in and outside skin. In the keel area, the overlap of the two skins from the two sides are often enough for power boats but sailboats may require extra layers to receive keel bolts.

For example, a stub keel or inside ballast:

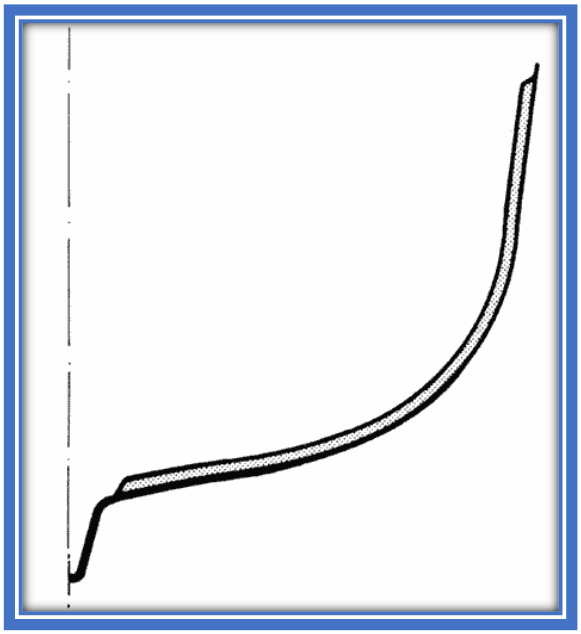

Unballasted boats may use a double sandwich (club sandwich) at the keel to prevent damage when stored on the hard or on a trailer: Some designers use a plywood core in that area.

Your plans will show those local reinforcements and specify the lamination schedule.

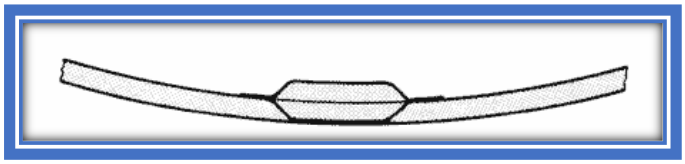

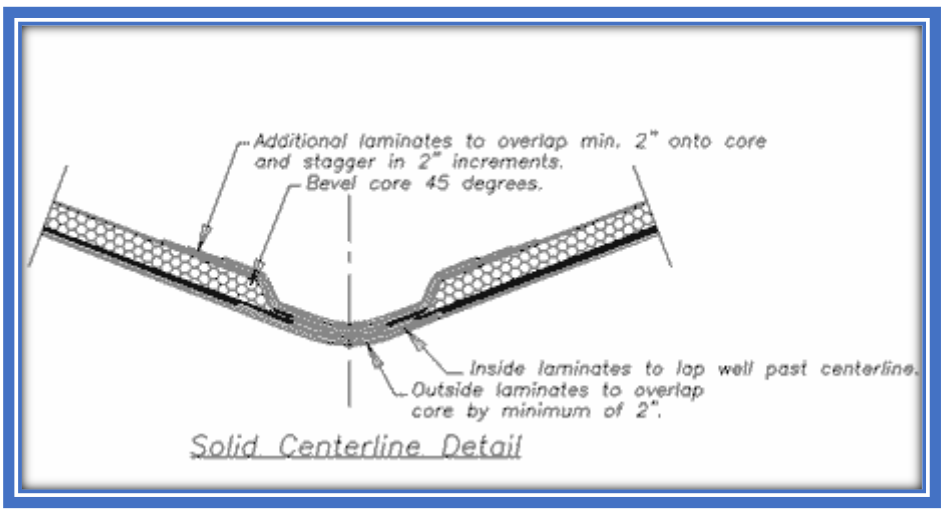

Build the inside skin.

This is done the same way as the outside skin.

Foam Sandwich Construction

All flat parts like bulkheads, frames, sole etc. should be built outside of the boat. Cut the foam to shape, do the fiberglass work on a table and fit later.
This is a great opportunity to use vacuum bagging. Even if you don't, the glass content will be higher and the finish better if you use compression molding.
It is easy to do: build a table or use a flat floor covered with some Melamine panels, larger enough to take your largest part and build your flat parts on it. You will push the glass and resin down either with a vacuum bag or with another panel and weights.

The table will first be coated with release agent like wax or covered with a polyethylene film.

Vacuum bagging is the subject of a different How-to.

Inside structure, installation:

Foam sandwich is a very stiff material and requires much less framing than single skin fiberglass boats. In most cases, interior components are used as structural framing and very few if any additional stiffeners are required. Transversal and longitudinal bulkheads, stringers or engine girders, sole and deck will all become part of a monocoque structure.
The way those components are bonded to the hull is critical. A stiffener edge will never push directly on the inside skin or core. The loads will be transmitted by the skins.
Bulkheads must be installed on a trapezoidal foam pad.

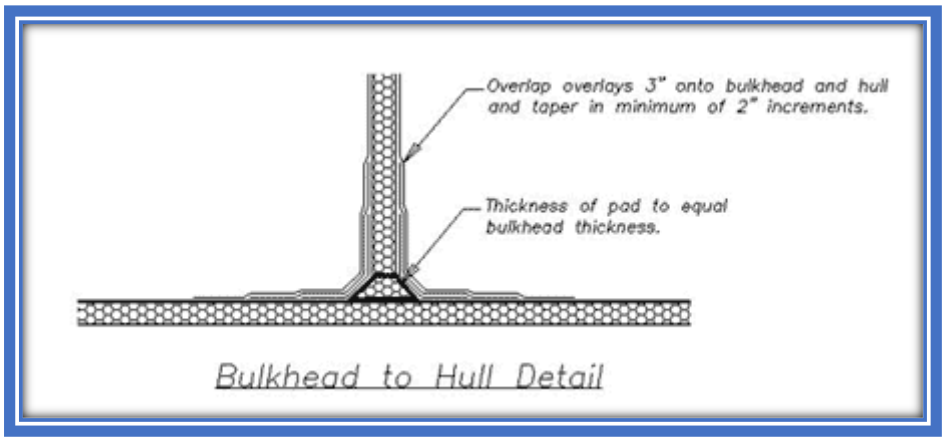

The foam pads are easy to cut from leftover foam and eliminate the need for the putty fillets used in stitch and glue.

When some parts of the hull require additional stiffeners, those are made from foam strips, trapezoidal section, covered by fiberglass tape.

Engine beds, stringers and other girders are often made of a "top hat" section:

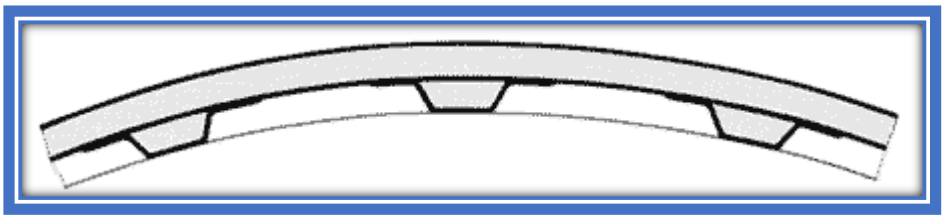

Foam Sandwich Construction

In high performance hulls, those stiffeners may be capped with carbon fiber.

You can cut those parts yourself or buy pre-shaped stiffeners made from a core foam with dry fiberglass skins, ready to install like the Preforms sold by Prisma Composites.

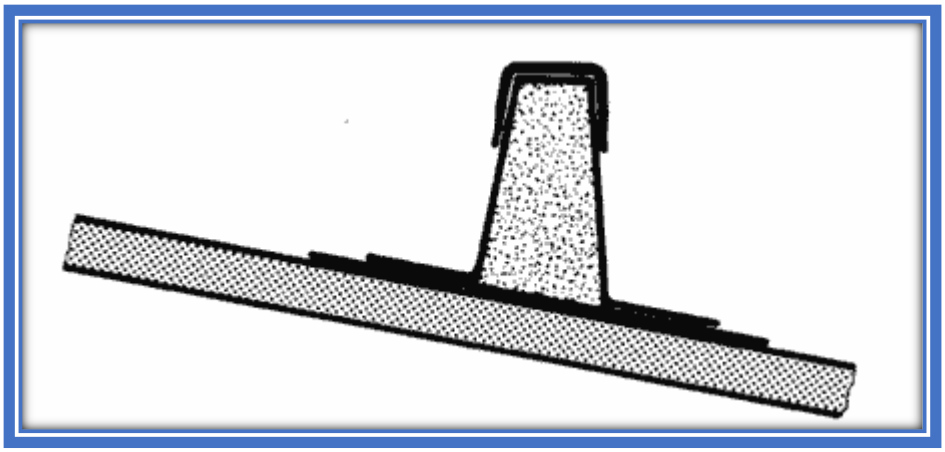

A stringer on a small boat, not used as engine bed, can be made of foam planks the same way as in plywood/epoxy/glass construction.

Angular connections like a chine or transom to hull seam will benefit from a foam insert instead of a putty fillet:

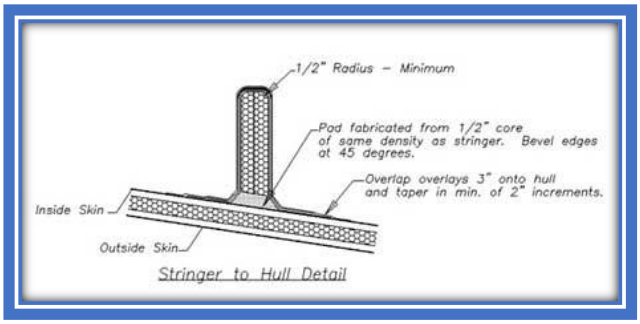

The builder must keep in mind that sharp angles always represent a potential weakness in fiberglass reinforced composites.
This means building nice round corners with corner strips and using foam pads under the framing.
In most cases, a radius equal to the thickness of the foam core is ideal.
Excessively large radii are not as strong.

The deck and superstructure can be built either on the hull or better, separately on a plug, the same way as the hull.

It is tempting to use the existing hull with its frames and bulkheads as a mold for the deck, but you will do a much cleaner job building the deck on a separate mold. This may even be easier if the designer used a constant camber for all the parts. In that case, one slatted mold the size of your largest part will be sufficient.

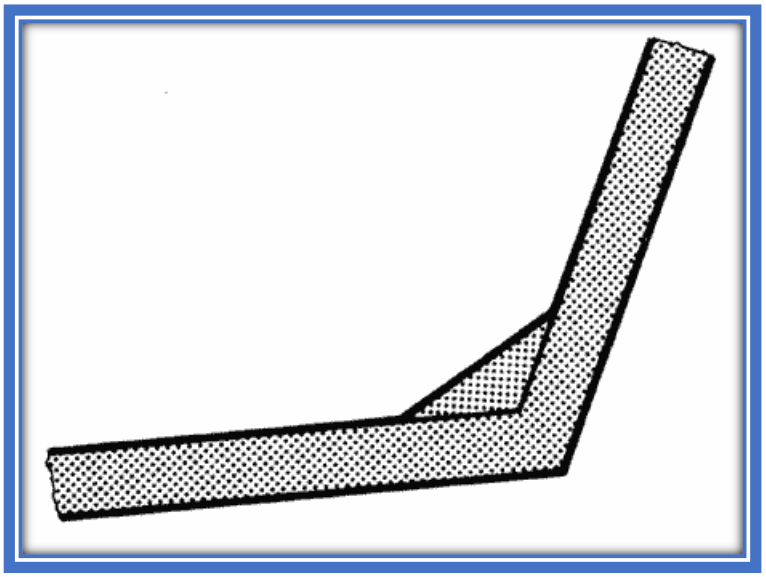

Foam Sandwich Construction

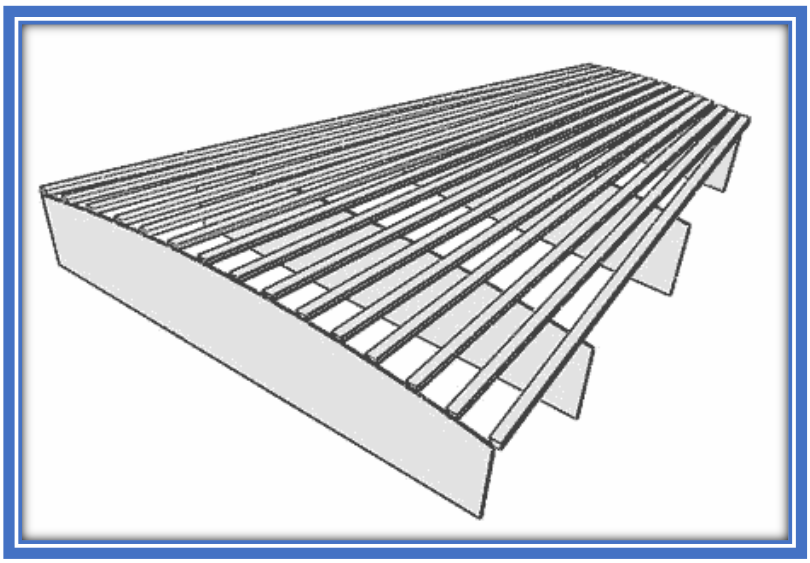

In the best-case scenario, that same mold will be used for all deck parts, the roofs and sometimes for the cockpit or cabin sides. " In other cases, it will be necessary to fabricate a complete superstructure mold. If you kept the cuts from the hull molds, they will provide a good start with the correct camber and width.

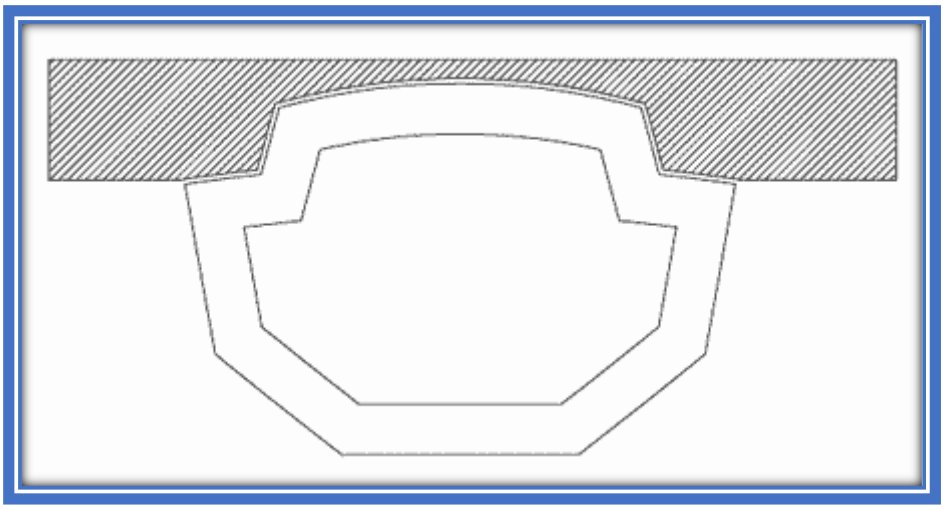

You can also use the top of the hull molds to build a deck mold but keep track of the baseline.

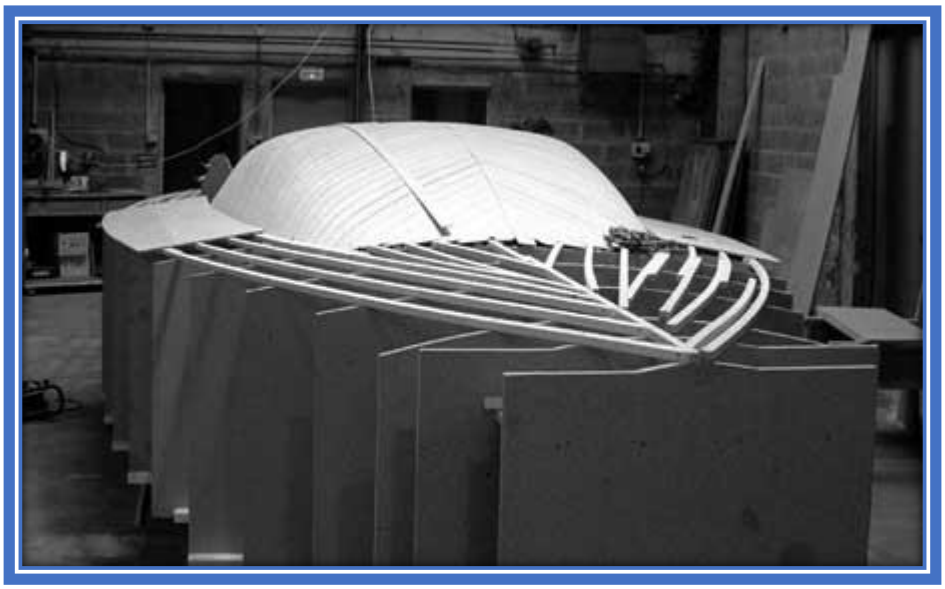

Some builders prefer to build the superstructure on a female mold. Either method is valid, but the female mold has one big advantage: the outside skin can be applied with the deck on the hull allowing for overlaps on the hull which create a much stronger deck to hull joint.

The second method uses the existing hull as a mold. Battens are installed on top of the bulkheads and that structure is used as a mold

Foam Sandwich Construction

In this picture, we see the deck of a small power boat. No bulkheads but temporary deck frames. What you do not see are battens under the foam and polyethylene sheets to keep the deck from bonding to the hull. " The upper side of the foam will be fiber glassed, the foam removed, flipped and the other side glassed.

During the fabrication of the deck, it is essential to plan for the installation of hardware and use high density foam inserts wherever necessary: under winches, cleats, windlass, pulpit, stanchions etc. This is only required where we expect high compression loads. There is no need for high density foam around hatches for example. See the details chapter for more information about hardware installation.

Deck to hull bond.

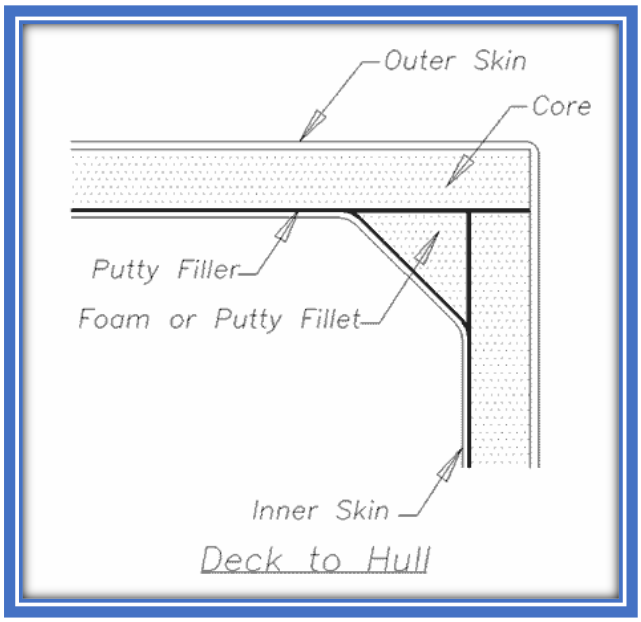

The picture above shows a simple and clean hull to deck seam.

In the picture below, the sheer clamp and the edges of deck and hull are made of high-density foam. This allows the installation of a rub rail and stanchions with mechanical fasteners.

The strongest boat will be the one with a deck tabbed to the hull with inside and outside tape.

Here we show a hull to deck seam with single skin corner filled with a high density insert. This is the strongest possible hull to deck joint, ideal for commercial boats but not necessary for most pleasure boats.

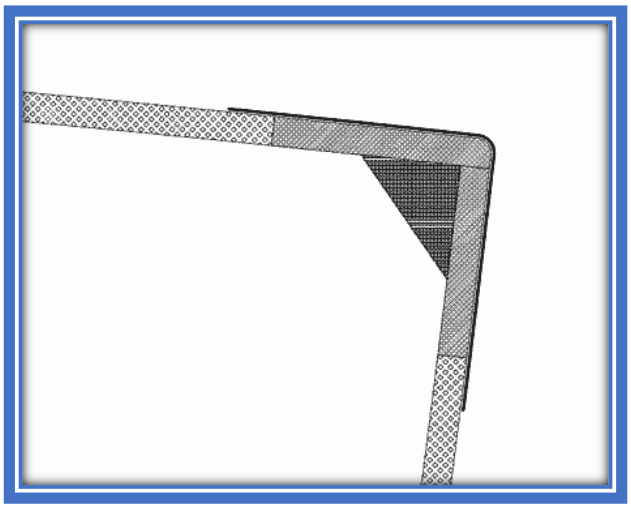

The outside tabbing will produce a ridge that is difficult to fair and the inside tabbing will be problematic unless the hull is rolled on its side. For that reason, decks are often simply epoxy glued to a sheer clamp with a thin tape of glass on the outside.

Keep in mind that most production boats have their decks simply fastened to the hull sheer clamp with mechanical fasteners and a sealant. The best production boats have their deck epoxy glued to the hull with a sheer clamp but very rarely tabbed to the hull.

Foam Sandwich Construction

The deck should also be epoxy glued to cleats on frames and bulkheads. Inside cabins, those cleats are sometimes made of laminated wood to mimic wooden roof frames, in other places, we will use the same triangular section of high density than for the hull to deck seam.

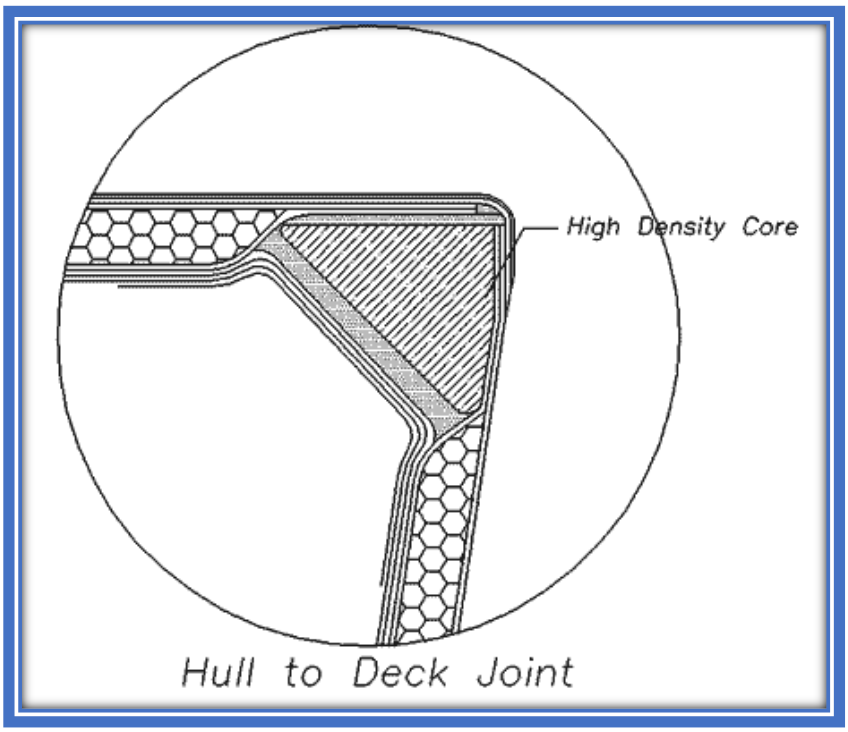

In this picture of a superstructure section, you see roof beams under roof and triangular cleats under gunwale, made from high density foam or laminated wood. Sheer clamp not shown.

Chain plates, rub rails, cleats, winches and other hardware should be installed on high density foam inserts or use sleeves or with epoxy putty inserts. High density foam inserts is the preferred method. In some rare cases, hardware is installed on single skin fiberglass.

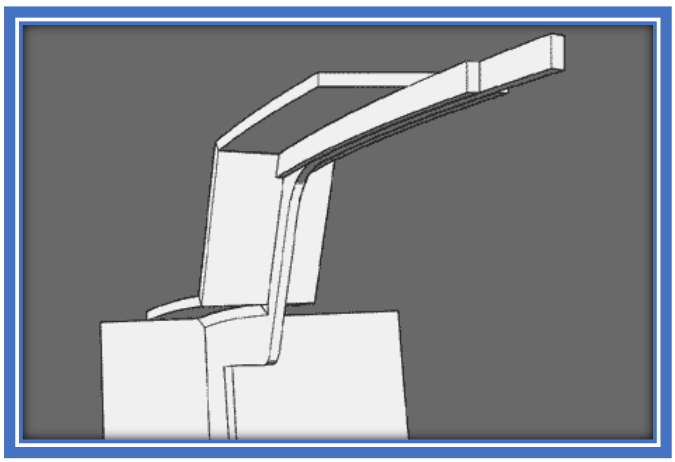

In addition to the high-density foam inserts, all hardware is installed on wide backing plates.

Rub rails are best fastened to high density foam. If the plans show such a rub rail, the plank closest to the sheer should be made from high density foam or the hull to deck seam should be made in single skin.

Seacocks are not structural and do not compress the foam if installed correctly. High density foam inserts are optional.

Seacocks can also be installed through the hull core bedded in epoxy putty. Drill a hole slightly larger than the diameter of the seacock, seal the hole with resin and after it cures, install the seacock with adequate sealant and without excessive pressure.

Hull portholes, windows, hatch framing are installed directly on the hull or deck foam, no need for inserts.

Rudder ports or rudder gudgeons should be installed on high density foam inserts, same as the cleats.

Trailer able boats will have U bolts on the transom and bow. Those must be installed on high density foam inserts.

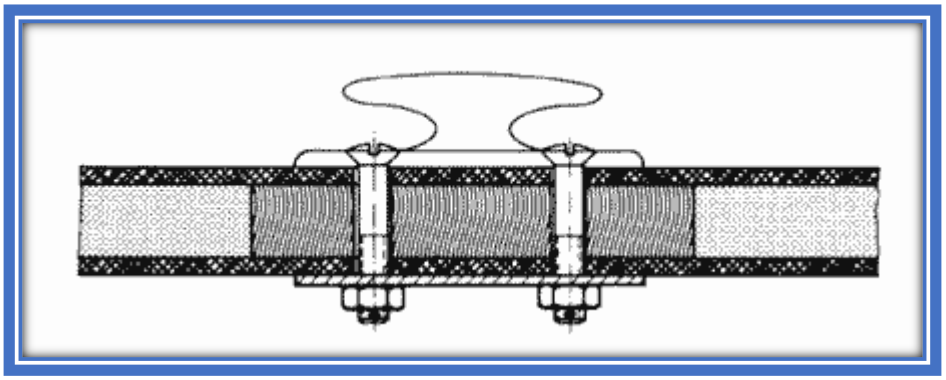

Foam Sandwich Construction

Alternate methods are SS sleeves or epoxy putty inserts. In all cases, use wide backing plates. Evan's Gatehouse rule of thumb for fiberglass and aluminum backing plates is a thickness equal 0.4 or 0.5 times the fastener diameter for solid glass backing pads or .3 to 0.4 times diameter for aluminum.
For example, if the specified bolts are 10 mm (3/*) diameter, then the aluminum backing plate should be between 3 and 4 mm thick (3/16").

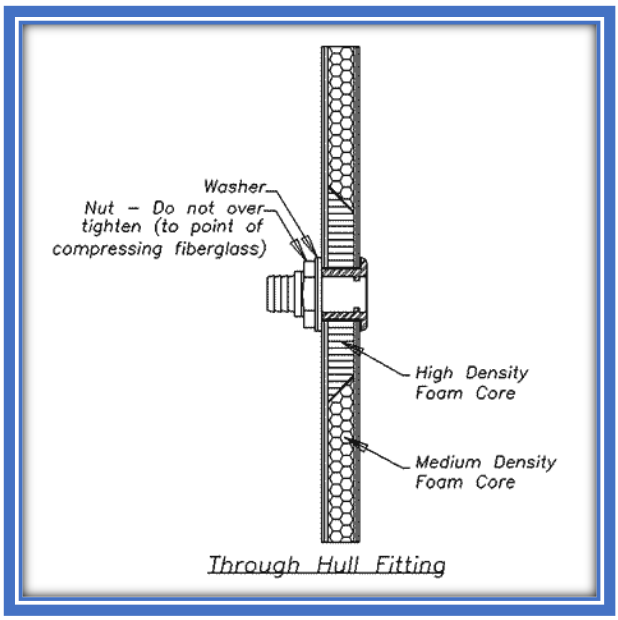

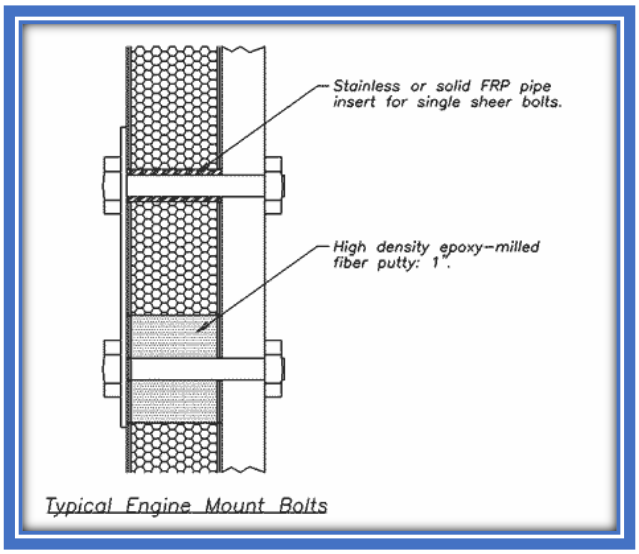

Sail boat chain plates fastened to the hull are rare nowadays but if your plans call for them, you should make a transition to single skin where the chain plates are fastened.

Lifting plates on power boats are sometimes installed the same way than chain plates.